www.GoyoLenses.com
vc_tech@126.com

3 Motorized Zoom 2/3" Varifocal

GAZ10100M-S

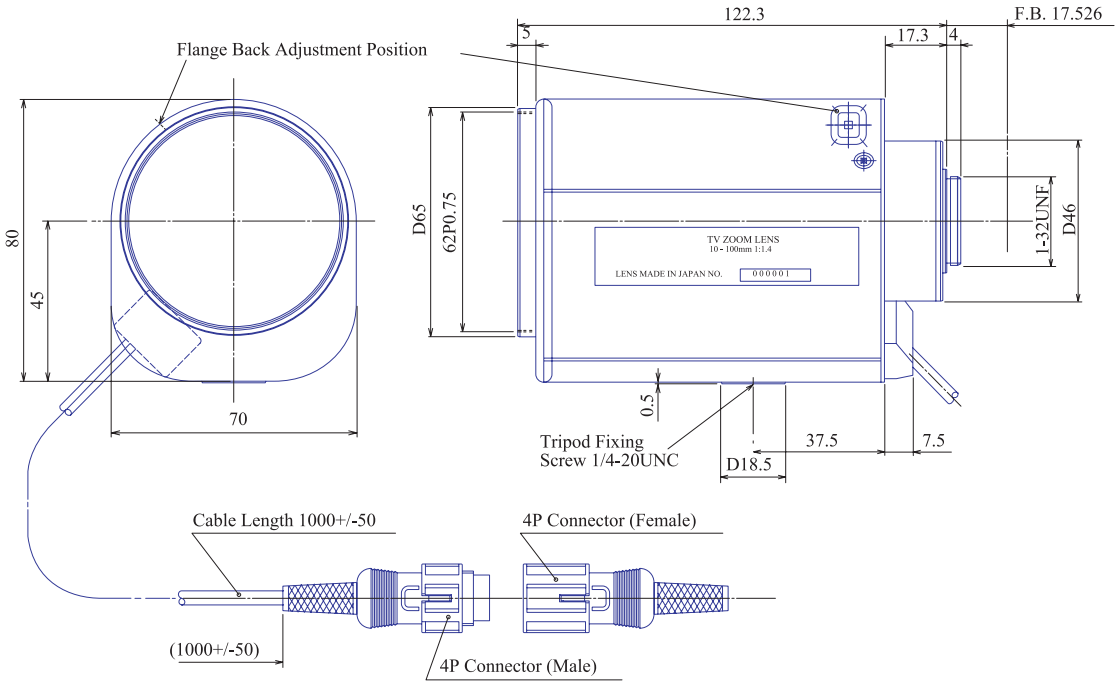

Part No.	GAZ10100M-S
Focal Length	10-100mm
Iris Range	f/1.4-Close
Lens Format	2/3"
MOD	1200mm
Mount	C
Filter Thread	M62 x P0.75
Angle of View (HxV) 1/2"	47.5°x 36.5° - 5.0° x 3.8°
Weight	700g
Dimension (WxHxL)	Ø80 x 70 x 125