UV Quartz Fixed-Focal

GMUV510540C

www.GoyoLenses.com
vc_tech@126.com

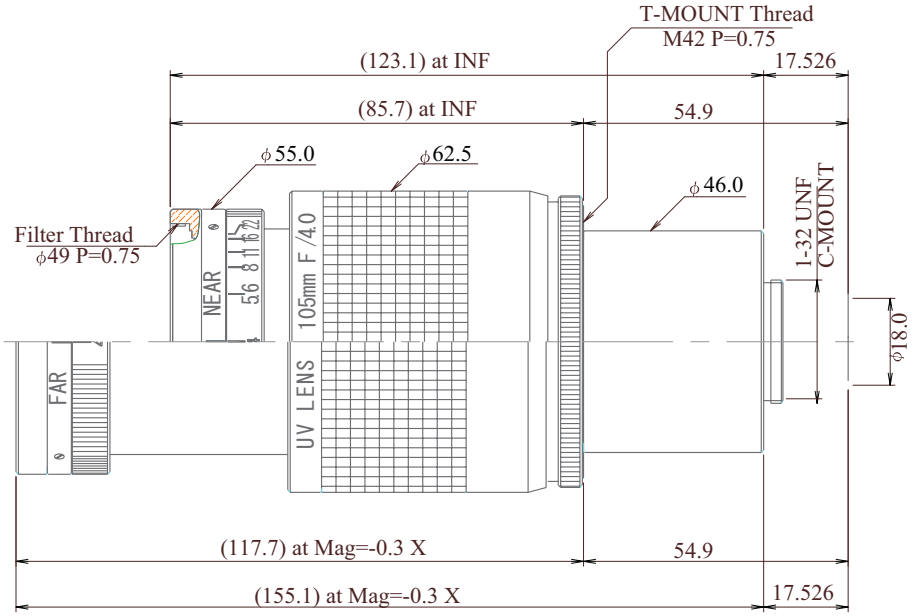

Part No.	GMUV510540C
Focal Length	105mm
Iris Range	f/4.0-22
Image Circle	18mm
Mount	C, T
Filter Thread	M49 x P0.75
Angle of View (HxVxD) 1"	6.98° x 5.24° x 8.73°
Weight	155g
Dimension (DxL)	Ø43 x 49
Drive	–